Cambridge Assessment International Education

Cambridge IGCSE™

CANDIDATE NAME	

CENTRE NUMBER						CANDIDATE NUMBER					

PHYSICS **0625/43**

Paper 4 Theory (Extended) **October/November 2020**

1 hour 15 minutes

You must answer on the question paper.

No additional materials are needed.

INSTRUCTIONS

- Answer **all** questions.
- Use a black or dark blue pen. You may use an HB pencil for any diagrams or graphs.
- Write your name, centre number and candidate number in the boxes at the top of the page.
- Write your answer to each question in the space provided.
- Do **not** use an erasable pen or correction fluid.
- Do **not** write on any bar codes.
- You may use a calculator.
- You should show all your working and use appropriate units.
- Take the weight of 1.0 kg to be 10 N (acceleration of free fall = 10 m/s^2).

INFORMATION

- The total mark for this paper is 80.
- The number of marks for each question or part question is shown in brackets [ ].

This document has **20** pages. Blank pages are indicated.

DC (CJ/CGW) 196162/3
© UCLES 2020

[Turn over

www.root19.com +91 - 9969 353 391

1 **(a)** Fig. 1.1 shows a trolley travelling down a ramp.

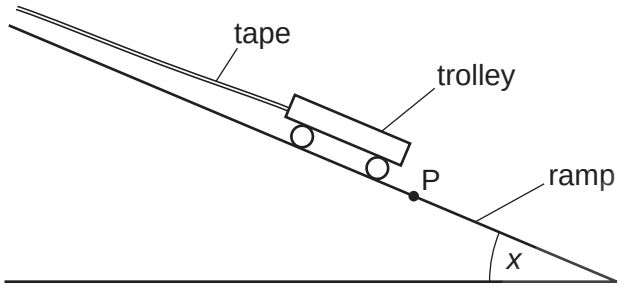

Fig. 1.1

The trolley has a piece of paper tape attached to it. The tape passes through a machine which makes a dot on the tape every 0.02 s.

Fig. 1.2 shows a section of the tape.

Fig. 1.2

(i) State how the dots on the tape show that the trolley was moving with constant speed.

..... [1]

(ii) When the trolley reaches the point P, the ramp is tilted so that the angle *x* is greater.

Describe and explain the change in motion of the trolley.

description .....

.....

explanation .....

.....

[2]

www.root19.com +91 - 9969 353 391

(b) Another trolley is released from the top of the ramp.

Fig. 1.3 shows the speed–time graph for this trolley.

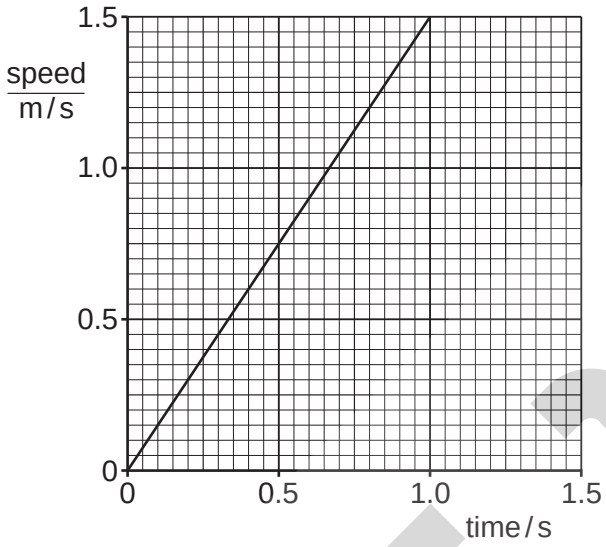

Fig. 1.3

Using Fig. 1.3, calculate the distance travelled by the trolley in the first 0.5 s.

distance = ... [2]

www.root19.com +91 - 9969 353 301

(c) Fig. 1.4 shows a metal ball at rest in a tube of liquid.

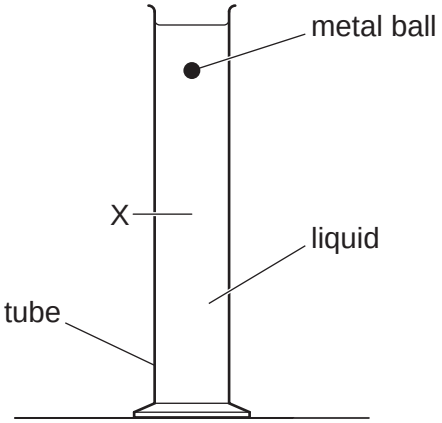

Fig. 1.4

The ball is released and reaches terminal velocity at point X.

Explain the motion of the ball as it falls from rest until it reaches point X.

Use ideas of force and acceleration in your answer.

.....

.....

.....

.....

..... [3]

[Total: 8]

www.root19.com +91 - 9969 353 391

2 Fig. 2.1 shows a cliff edge with water below it.

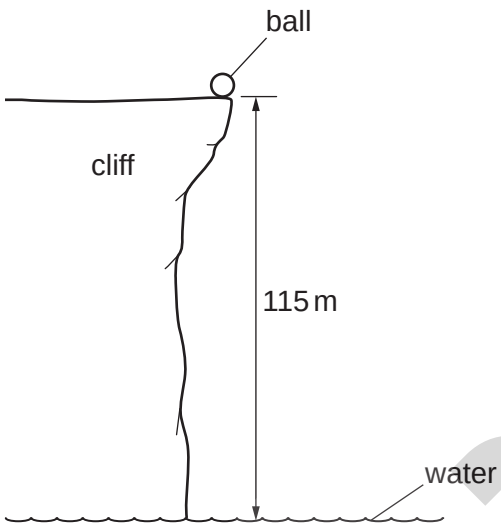

Fig. 2.1

A ball falls over the edge of the cliff. The mass of the ball is 160 g. The height of the cliff is 115 m.

(a) Calculate the vertical speed of the ball as it hits the water. Air resistance can be ignored.

speed = ... [3]

(b) Calculate the vertical momentum of the ball as it hits the water.

momentum = ... [2]

[Total: 5]

© UCLES 2020

www.root19.com
+91 - 9969 353 301

3 **(a)** **(i)** Speed is a scalar quantity.

State **one** other scalar quantity.

..... [1]

(ii) Velocity is a vector quantity.

State **one** other vector quantity.

..... [1]

(b) Fig. 3.1 shows a model car travelling at constant speed on a flat circular track.

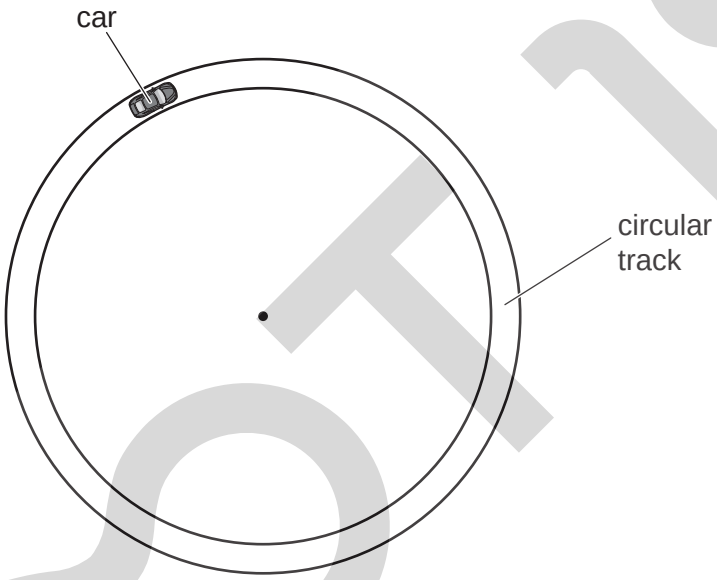

Fig. 3.1

The speed of the car is 0.30 m/s. In one complete revolution around the track, the car travels 3.9 m.

(i) Calculate the time taken for the car to complete one revolution around the track.

time = ... [2]

www.root19.com +91 - 9969 353 391

(ii) On Fig. 3.1, draw and label with the letter F an arrow to show the resultant force acting on the car. [1]

(iii) The speed of the car increases and at point P on Fig. 3.2 the car does not stay on the track.

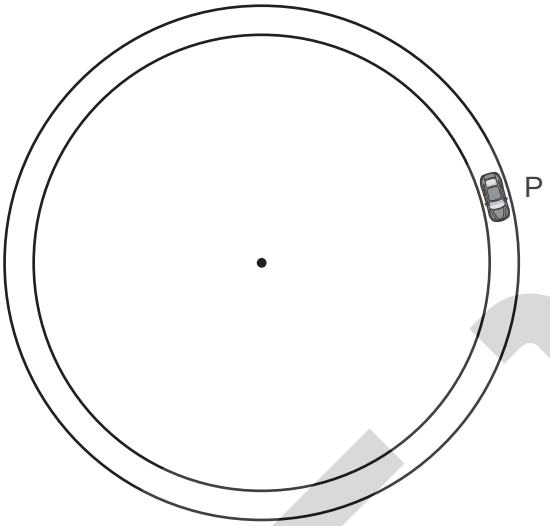

Fig. 3.2

1. Suggest, in terms of the force acting on the car, why the car does not stay on the track at point P.

.....

..... [1]

2. On Fig. 3.2, draw and label an arrow with the letter S to show the direction of motion of the car as it leaves the track at point P. [1]

[Total: 7]

ROOT19

www.root19.com +91 - 9969 353 301

4 In Fig. 4.1, the circles represent molecules in different states of matter.

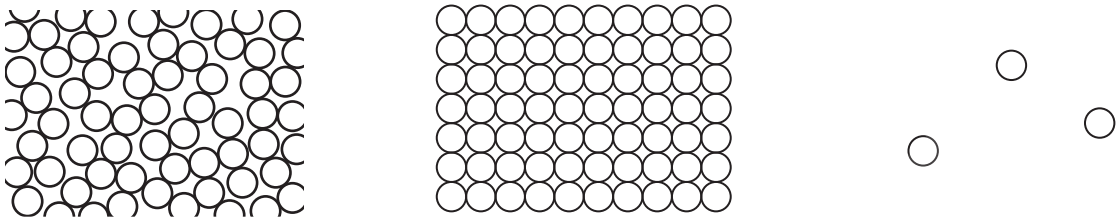

Fig. 4.1

(a) Identify the states **A**, **B** and **C**.

A ……..

B ……..

C ……..

[2]

(b) Explain, in terms of forces between molecules, why gases expand more than liquids when they have the same rise in temperature. Assume that the pressure remains constant.

.....

.....

..... [2]

(c) Fig. 4.2 shows a cylinder and piston.

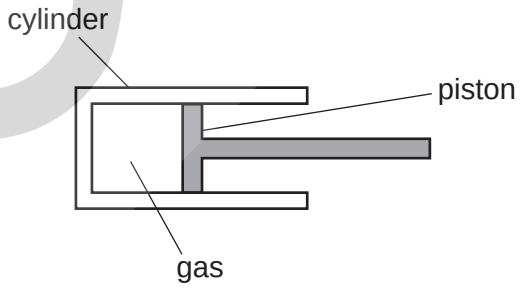

Fig. 4.2

The volume of gas in the cylinder is 3400 cm^3. The pressure of the gas in the cylinder is 0.90×10^5 Pa.

www.root19.com +91 - 9969 353 391

(i) The piston is moved to the left and fixed in a new position. The pressure of the gas in the cylinder increases to 2.5×10^5 Pa. Assume that the temperature of the gas does not change.

Calculate the new volume of the gas.

volume = ... [3]

(ii) The gas in the cylinder is now heated. The piston remains fixed in the same position as in **(c)(i)**.

State and explain, in terms of molecules, any change in the pressure of the gas.

statement .....

explanation .....

.....
[3]

[Total: 10]

© UCLES 2020

www.root19.com
+91 - 9969 353 301

5 Fig. 5.1 shows two metal plates A and B with a radiant heater placed midway between them.

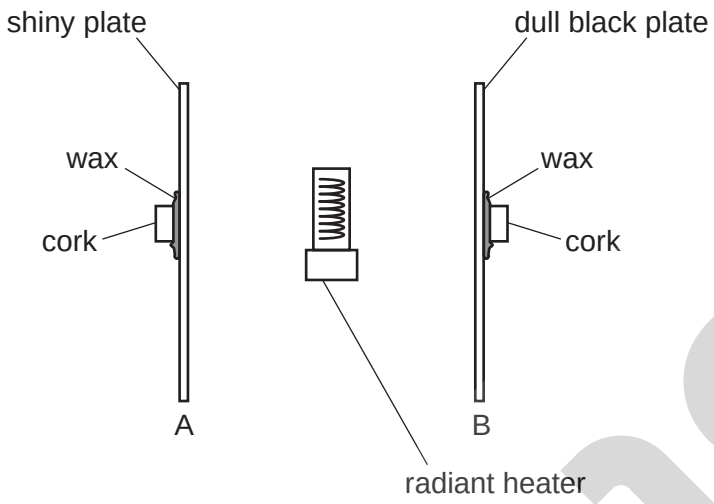

Fig. 5.1

Metal plate A is shiny. Metal plate B is dull black. A piece of cork is attached to each plate using wax. The wax is a solid at room temperature and has a melting point of 37 °C.

(a) State and explain what happens to the pieces of cork a few minutes after the heater is switched on.

.....

.....

.....

.....

..... [4]

(b) Give the name of the method of transfer of thermal energy in solid metals.

..... [1]

[Total: 5]

© UCLES 2020
www.root19.com

+91 - 9969 353 391

6 **(a)** Sound waves consist of compressions and rarefactions.

Explain the terms *compression* and *rarefaction*. Give your explanation in terms of the spacing of molecules and the pressure for sound waves in air.

compression .....

.....

rarefaction .....

.....
[3]

(b) A musical instrument emits a sound with a frequency of 4.4 kHz. The speed of sound in air is 340 m/s.

(i) Calculate the wavelength of the sound.

wavelength = ... [3]

(ii) The frequency of the sound emitted by the instrument is changed to 5.1 kHz and the amplitude of the sound is increased.

Without calculation, state what happens to

1. the speed of the sound .....

2. the wavelength of the sound .....
[2]

[Total: 8]

© UCLES 2020

www.root19.com +91 - 9969 353 301

7 **(a)** State **two** uses for infrared radiation.

1. .....

.....

2. .....

.....
[2]

(b) X-rays are used in hospitals to help treat patients.

Suggest and explain **three** precautions for the safe use of X-rays.

1. .....

.....

2. .....

.....

3. .....

.....
[3]

(c) **(i)** State the speed in a vacuum of

1. microwaves ..... [1]

2. X-rays ..... [1]

(ii) State a possible frequency for an ultrasound wave.

..... [1]

[Total: 8]

© UCLES 2020
www.root19.com

+91 - 9969 353 391

8 **(a)** **(i)** Fig. 8.1 shows an electrical circuit. The resistor has a resistance of 4.0 Ω. The reading on the voltmeter is 3.0 V.

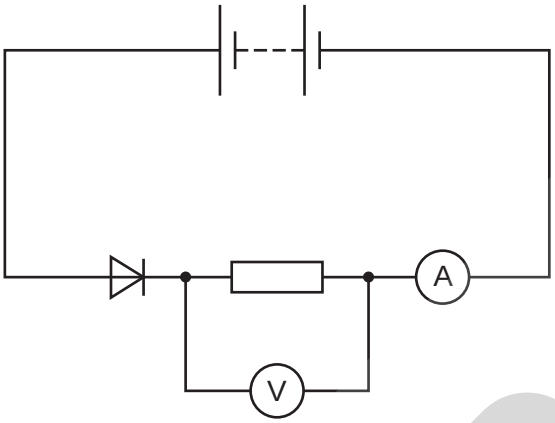

Fig. 8.1

Calculate the current in the resistor.

current = ... [2]

(ii) Fig. 8.2 shows the same circuit with one component reversed.

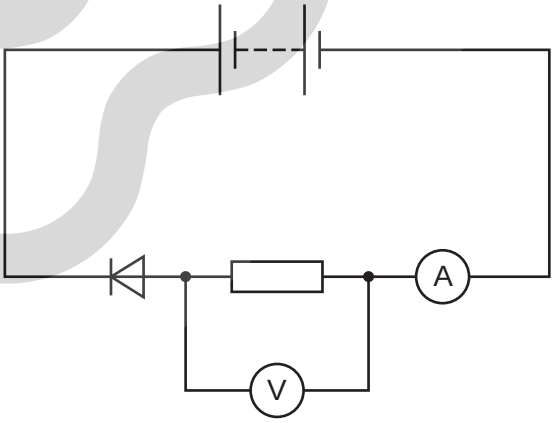

Fig. 8.2

State the reading on the voltmeter and explain your answer.

reading = ...

explanation .....

.....
[2]

www.root19.com +91 - 9969 353 301

(b) Fig. 8.3 shows the symbol for a logic gate.

Fig. 8.3

The truth table for this logic gate is shown in Table 8.1.

Table 8.1

input X	input Y	output Z
0	0	0
0	1	0
1	0	0
1	1	1

State the name of this logic gate. …….. [1]

(c) **(i)** A student designs the circuit shown in Fig. 8.4.

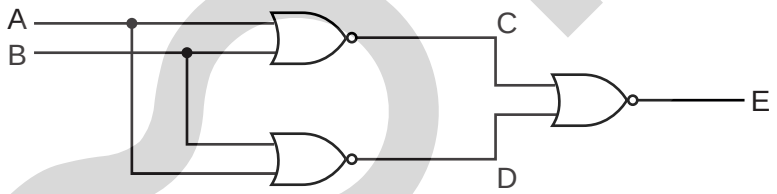

Fig. 8.4

Complete the truth table for this circuit in Table 8.2.

Table 8.2

A	B	C	D	E
0	0			
0	1			
1	0			
1	1			

[3]

(ii) A single logic gate can be used to produce output E in Fig. 8.4 with the inputs A and B shown in Table 8.2.

State the name of this logic gate. …… [1]

[Total: 9]

www.root19.com +91 - 9969 353 391

9 **(a)** Electrical power is produced in a power station by an alternating current (a.c.) generator. The output of the generator has a voltage of 22 000 V. The electrical power is transmitted at a voltage of 400 000 V.

Explain why electrical power is transmitted at a voltage of 400 000 V and not 22 000 V.

.....

.....

.....

.....

.....

..... [3]

(b) A computer contains a transformer.

The input voltage to the transformer is 240 V. The output voltage from the transformer is 20 V and the output current is 2.3 A.

The efficiency of the transformer is 90%.

Calculate the input current to the transformer.

current = ... [5]

[Total: 8]

www.root19.com +91 - 9969 353 301

10 Fig. 10.1 shows a relay.

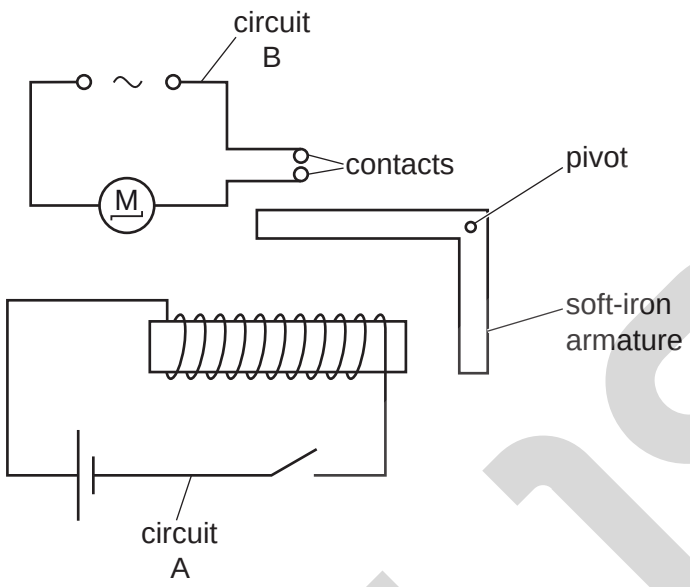

Fig. 10.1

(a) The switch in circuit A is closed. Describe how this operates the motor in circuit B.

.....

.....

.....

..... [3]

(b) The switch in circuit A is opened. The soft-iron armature is replaced with a steel armature. The switch in circuit A is closed.

Explain what happens when the switch in circuit A is then opened.

.....

.....

..... [2]

[Total: 5]

www.root19.com +91 - 9969 353 391

11 **(a)** Fig. 11.1 shows a beam of α-particles, β-particles and γ-rays directed between two metal plates P and Q.

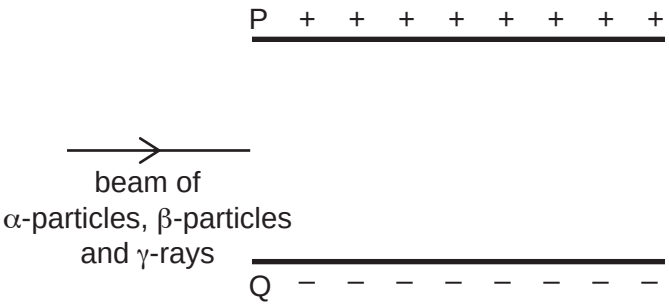

Fig. 11.1

The metal plates are parallel and there is a large potential difference (p.d.) between them. Plate P is positive and plate Q is negative.

On Fig. 11.1, draw the paths of each of the radiations between the plates and after leaving the plates.

Label the paths α, β and γ. [5]

(b) State and explain **one** practical application of γ-rays.

application .....

explanation .....

.....

[2]

[Total: 7]

© UCLES 2020

www.root19.com
+91 - 9969 353 391

BLANK PAGE

© UCLES 2020
www.root19.com

+91 - 9969 353 391

BLANK PAGE

© UCLES 2020
www.root19.com

+91 - 9969 353 391

BLANK PAGE

Permission to reproduce items where third-party owned material protected by copyright is included has been sought and cleared where possible. Every reasonable effort has been made by the publisher (UCLES) to trace copyright holders, but if any items requiring clearance have unwittingly been included, the publisher will be pleased to make amends at the earliest possible opportunity.

To avoid the issue of disclosure of answer-related information to candidates, all copyright acknowledgements are reproduced online in the Cambridge Assessment International Education Copyright Acknowledgements Booklet. This is produced for each series of examinations and is freely available to download at www.cambridgeinternational.org after the live examination series.

Cambridge Assessment International Education is part of the Cambridge Assessment Group. Cambridge Assessment is the brand name of the University of Cambridge Local Examinations Syndicate (UCLES), which itself is a department of the University of Cambridge.